Floor board

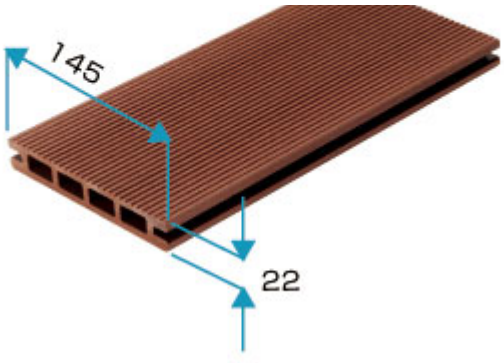

Joist / Sleeper

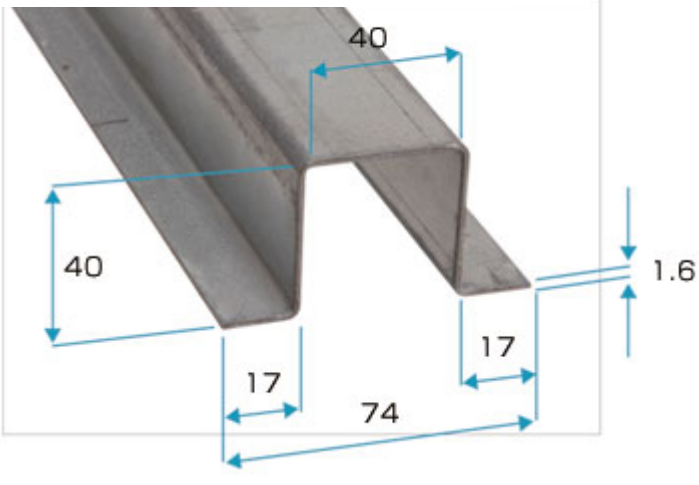

Piller / Clip

ESS200~400